Acta Crystallographica Section E
**Structure Reports Online**
ISSN 1600-5368

# 2,2′-Diisopropoxy-5,5′-methylenedibenzaldehyde

**G. Suresh,[a] V. Sabari,[a] A. Devaraj,[b] M. Bakthadoss[b] and S. Aravindhan[a]***

[a]Department of Physics, Presidency College (Autonomous), Chennai 600 005, India, and [b]Department of Organic Chemistry, University of Madras, Chennai 600 025, India
Correspondence e-mail: aravindhanpresidency@gmail.com

Received 19 June 2012; accepted 20 June 2012

Key indicators: single-crystal X-ray study; $T$ = 293 K; mean $\sigma$(C–C) = 0.004 Å; $R$ factor = 0.040; $wR$ factor = 0.114; data-to-parameter ratio = 9.0.

Molecules of the title compound, $C_{21}H_{24}O_4$, are located on a twofold rotation axis running through the central methylene C atom. The aldehyde group is coplanar with the benzene ring [C—C—C—O = 175.7 (4) °].

## Related literature

For related salicylaldehyde compounds, see: Qiu *et al.* (2009); Yu *et al.* (2007); Wang *et al.* (2009).

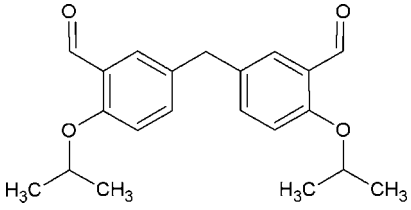

## Experimental

*Crystal data*

$C_{21}H_{24}O_4$
$M_r$ = 340.40
Orthorhombic, *Fdd*2
$a$ = 26.337 (9) Å
$b$ = 28.349 (10) Å
$c$ = 4.990 (2) Å
$V$ = 3726 (2) Å$^3$
$Z$ = 8
Mo $K\alpha$ radiation
$\mu$ = 0.08 mm$^{-1}$
$T$ = 293 K
0.35 × 0.25 × 0.20 mm

*Data collection*

Bruker SMART APEXII area-detector diffractometer
Absorption correction: multi-scan (*SADABS*; Bruker, 2008)
$T_{min}$ = 0.972, $T_{max}$ = 0.984
4329 measured reflections
1022 independent reflections
886 reflections with $I > 2\sigma(I)$
$R_{int}$ = 0.035

*Refinement*

$R[F^2 > 2\sigma(F^2)]$ = 0.040
$wR(F^2)$ = 0.114
$S$ = 1.06
1022 reflections
114 parameters
1 restraint
H-atom parameters constrained
$\Delta\rho_{max}$ = 0.17 e Å$^{-3}$
$\Delta\rho_{min}$ = −0.13 e Å$^{-3}$

Data collection: *APEX2* (Bruker, 2008); cell refinement: *SAINT* (Bruker, 2008); data reduction: *SAINT*; program(s) used to solve structure: *SHELXS97* (Sheldrick, 2008); program(s) used to refine structure: *SHELXL97* (Sheldrick, 2008); molecular graphics: *ORTEP-3* (Farrugia, 1997); software used to prepare material for publication: *SHELXL97* and *PLATON* (Spek, 2009).

GS and SA thank Dr Babu Varghese, SAIF, IIT Madras, for the structure refinement clarifications and the Department of Bio Physics, University of Madras, for providing the single-crystal XRD facilities.

Supplementary data and figures for this paper are available from the IUCr electronic archives (Reference: BT5945).

## References

Bruker (2008). *APEX2*, *SAINT* and *SADABS*. Bruker AXS Inc., Madison, Wisconsin, USA.
Farrugia, L. J. (1997). *J. Appl. Cryst.* **30**, 565.
Qiu, L., Lin, J. & Xu, Y. (2009). *Inorg. Chem. Commun.* **12**, 986–989.
Sheldrick, G. M. (2008). *Acta Cryst.* A**64**, 112–122.
Spek, A. L. (2009). *Acta Cryst.* D**65**, 148–155.
Wang, H., Zhang, D., Ni, Z.-H., Li, X., Tian, L. & Jiang, J. (2009). *Inorg. Chem.* **48**, 5946–5956.
Yu, T.-Z., Su, W.-M., Li, W.-L., Hong, Z.-R., Hua, R.-N. & Li, B. (2007). *Thin Solid Films*, **515**, 4080–4084.

# supporting information

*Acta Cryst.* (2012). E**68**, o2199 [https://doi.org/10.1107/S1600536812028048]

## 2,2′-Diisopropoxy-5,5′-methylenedibenzaldehyde

**G. Suresh, V. Sabari, A. Devaraj, M. Bakthadoss and S. Aravindhan**

### S1. Comment

Salicylaldehyde and its derivatives are widely used in the construction of metal complexes (Qiu *et al.*, 2009; Wang *et al.*,2009; Yu *et al.*,2007).

X-Ray analysis confirms the molecular structure and atom connectivity as illustrated in (Fig. 1). There os one half molecule in the asymmetric unit located on a two-fold rotation axis. The aldehyde group is coplanar with the benzene ring [C2—C1—C8—O2 = 175.7 (4) °].

The crystal packing is stabilized by weak C-H···O hydrogen bonds.

### S2. Experimental

To a stirred solution of 5,5′-methylenebis(2-hydroxybenzaldehyde) (0.50 g, 1.95 mmol) in $CH_3CN$ (20 ml) was added $K_2CO_3$ (1.35 g, 9.76 mmol) and stirred for 15 min. To this, isopropylbromide (0.40 ml, 4.29 mmol) was added and stirred for 24 h at rt. After completion of the reaction as indicated by TLC, the reaction mixture was concentrated and the resulting crude mass was diluted with water (15 ml) and extracted with ethyl acetate (3 × 15 ml). The combined organic layer was washed with brine (2 × 10 ml) and dried over anhydrous $Na_2SO_4$.The organic layer was concentrated and the solid thus obtained was washed with ethylacetate-hexanes (1:9) to afford the compound 5,5′-Methylenebis(2-isopropoxybenzaldehyde) as a colourless solid in 95% yield.

### S3. Refinement

Hydrogen atom were found in a difference electron density map and subsequently treated as riding atoms with distances of 0.96 Å ($CH_3$), 0.97 Å ($CH_2$), 0.98 Å (tertiary CH) or 0.93 Å (aromatic CH). $U_{iso}$(H) was set to 1.2$U_{eq}$(C) or 1.5$U_{eq}$($C_{methyl}$), respectively. Due to the absence of anomalous scatterers, Friedel pairs were merged.

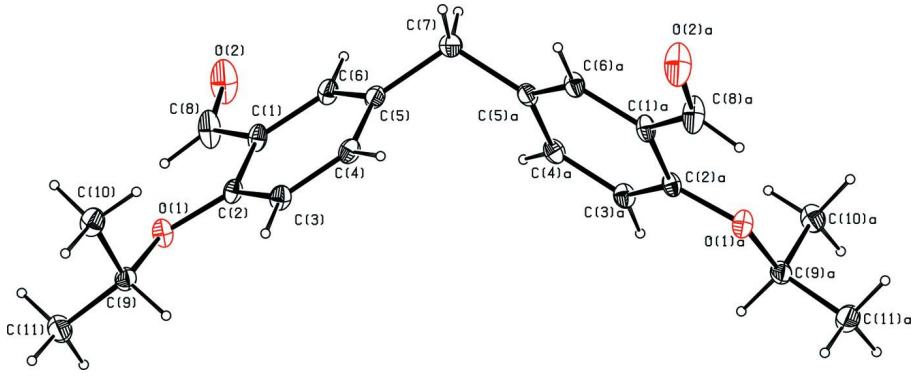


**Figure 1**

The molecular structure of the title compound, with displacement ellipsoids drawn at the 10% probability level.

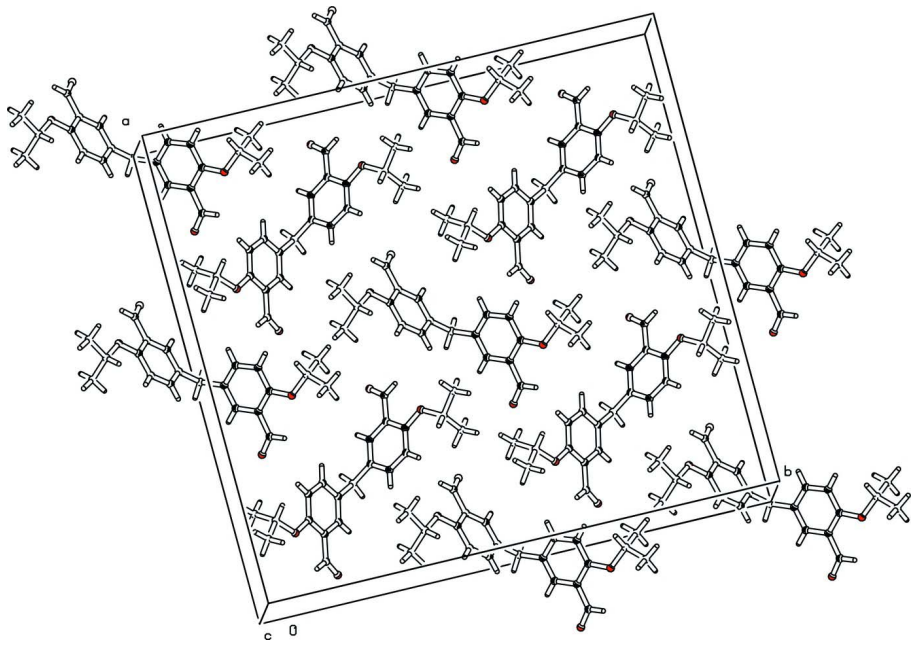


**Figure 2**

A view of the crystal packing.

## 2,2′-Diisopropoxy-5,5′-methylenedibenzaldehyde

*Crystal data*

$C_{21}H_{24}O_4$
$M_r$ = 340.40
Orthorhombic, *Fdd*2
Hall symbol: F 2 -2d
$a$ = 26.337 (9) Å
$b$ = 28.349 (10) Å
$c$ = 4.990 (2) Å
$V$ = 3726 (2) Å$^3$
$Z$ = 8
$F$(000) = 1456
$D_x$ = 1.214 Mg m$^{-3}$
Mo $K\alpha$ radiation, $\lambda$ = 0.71073 Å
Cell parameters from 1022 reflections
$\theta$ = 3.1–26.0°
$\mu$ = 0.08 mm$^{-1}$
$T$ = 293 K
Orthorhombic, colourless
0.35 × 0.25 × 0.20 mm

*Data collection*

Bruker SMART APEXII area-detector diffractometer
Radiation source: fine-focus sealed tube
Graphite monochromator
$\omega$ and $\varphi$ scans
Absorption correction: multi-scan (*SADABS*; Bruker, 2008)
$T_{min}$ = 0.972, $T_{max}$ = 0.984
4329 measured reflections
1022 independent reflections
886 reflections with $I > 2\sigma(I)$
$R_{int}$ = 0.035
$\theta_{max}$ = 26.0°, $\theta_{min}$ = 3.1°
$h$ = −32→32
$k$ = −31→34
$l$ = −6→4

*Refinement*

Refinement on $F^2$
Least-squares matrix: full
$R[F^2 > 2\sigma(F^2)]$ = 0.040
$wR(F^2)$ = 0.114
$S$ = 1.06
1022 reflections
114 parameters
1 restraint
Primary atom site location: structure-invariant direct methods
Secondary atom site location: difference Fourier map

Hydrogen site location: inferred from neighbouring sites
H-atom parameters constrained

$w = 1/[\sigma^2(F_o^2) + (0.0561P)^2 + 2.1412P]$ where $P = (F_o^2 + 2F_c^2)/3$
$(\Delta/\sigma)_{max} < 0.001$
$\Delta\rho_{max} = 0.17$ e Å$^{-3}$
$\Delta\rho_{min} = -0.13$ e Å$^{-3}$

*Special details*

**Geometry**. All e.s.d.'s (except the e.s.d. in the dihedral angle between two l.s. planes) are estimated using the full covariance matrix. The cell e.s.d.'s are taken into account individually in the estimation of e.s.d.'s in distances, angles and torsion angles; correlations between e.s.d.'s in cell parameters are only used when they are defined by crystal symmetry. An approximate (isotropic) treatment of cell e.s.d.'s is used for estimating e.s.d.'s involving l.s. planes.

**Refinement**. Refinement of $F^2$ against ALL reflections. The weighted *R*-factor *wR* and goodness of fit *S* are based on $F^2$, conventional *R*-factors *R* are based on *F*, with *F* set to zero for negative $F^2$. The threshold expression of $F^2 > \sigma(F^2)$ is used only for calculating *R*-factors(gt) *etc*. and is not relevant to the choice of reflections for refinement. *R*-factors based on $F^2$ are statistically about twice as large as those based on *F*, and *R*- factors based on ALL data will be even larger.

*Fractional atomic coordinates and isotropic or equivalent isotropic displacement parameters (Å$^2$)*

| | *x* | *y* | *z* | $U_{iso}$*/$U_{eq}$ | Occ. (<1) |
|---|---|---|---|---|---|
| O1 | 0.15629 (6) | 0.10388 (6) | 0.7445 (5) | 0.0632 (5) | |
| C4 | 0.25293 (9) | 0.18516 (9) | 0.9981 (6) | 0.0580 (6) | |
| H4 | 0.2873 | 0.1919 | 0.9767 | 0.070* | |
| C2 | 0.18085 (8) | 0.13881 (8) | 0.8776 (6) | 0.0499 (6) | |
| C7 | 0.2500 | 0.2500 | 1.3451 (9) | 0.0711 (11) | |
| H7A | 0.2245 | 0.2642 | 1.4598 | 0.085* | 0.50 |
| H7B | 0.2755 | 0.2358 | 1.4598 | 0.085* | 0.50 |
| C1 | 0.15181 (8) | 0.16511 (8) | 1.0577 (6) | 0.0552 (7) | |
| C3 | 0.23209 (8) | 0.14955 (8) | 0.8487 (6) | 0.0572 (7) | |
| H3 | 0.2521 | 0.1326 | 0.7288 | 0.069* | |
| C5 | 0.22521 (9) | 0.21160 (8) | 1.1795 (5) | 0.0546 (6) | |
| C6 | 0.17461 (9) | 0.20091 (8) | 1.2046 (6) | 0.0578 (7) | |
| H6 | 0.1549 | 0.2182 | 1.3240 | 0.069* | |
| C9 | 0.18476 (10) | 0.06998 (9) | 0.5895 (6) | 0.0621 (7) | |
| H9 | 0.2076 | 0.0865 | 0.4661 | 0.075* | |
| O2 | 0.07084 (7) | 0.17443 (8) | 1.2544 (9) | 0.1226 (13) | |
| C10 | 0.21526 (11) | 0.03853 (10) | 0.7716 (8) | 0.0760 (9) | |
| H10A | 0.2397 | 0.0571 | 0.8674 | 0.114* | |
| H10B | 0.2325 | 0.0151 | 0.6667 | 0.114* | |
| H10C | 0.1930 | 0.0233 | 0.8968 | 0.114* | |
| C11 | 0.14556 (13) | 0.04302 (12) | 0.4324 (8) | 0.0882 (11) | |
| H11A | 0.1274 | 0.0643 | 0.3176 | 0.132* | |
| H11B | 0.1222 | 0.0281 | 0.5537 | 0.132* | |
| H11C | 0.1620 | 0.0194 | 0.3255 | 0.132* | |
| C8 | 0.09748 (9) | 0.15523 (10) | 1.0940 (10) | 0.0888 (13) | |
| H8 | 0.0828 | 0.1325 | 0.9845 | 0.107* | |

*Atomic displacement parameters (Å$^2$)*

| | $U^{11}$ | $U^{22}$ | $U^{33}$ | $U^{12}$ | $U^{13}$ | $U^{23}$ |
|---|---|---|---|---|---|---|
| O1 | 0.0503 (9) | 0.0492 (9) | 0.0902 (13) | −0.0024 (7) | 0.0055 (10) | −0.0102 (10) |

| | | | | | | |
|---|---|---|---|---|---|---|
| C4 | 0.0436 (11) | 0.0618 (14) | 0.0686 (15) | −0.0084 (10) | 0.0086 (12) | 0.0086 (14) |
| C2 | 0.0445 (11) | 0.0388 (11) | 0.0663 (15) | 0.0025 (9) | 0.0052 (12) | 0.0066 (11) |
| C7 | 0.079 (2) | 0.074 (3) | 0.060 (2) | −0.0213 (19) | 0.000 | 0.000 |
| C1 | 0.0430 (11) | 0.0383 (11) | 0.0844 (19) | 0.0028 (9) | 0.0120 (13) | 0.0036 (13) |
| C3 | 0.0477 (12) | 0.0544 (14) | 0.0695 (16) | −0.0004 (10) | 0.0158 (12) | −0.0006 (14) |
| C5 | 0.0576 (12) | 0.0495 (13) | 0.0568 (15) | −0.0065 (10) | 0.0027 (12) | 0.0081 (12) |
| C6 | 0.0560 (12) | 0.0444 (12) | 0.0730 (18) | 0.0018 (10) | 0.0181 (13) | 0.0005 (14) |
| C9 | 0.0704 (15) | 0.0549 (14) | 0.0609 (15) | −0.0082 (12) | 0.0218 (14) | −0.0046 (13) |
| O2 | 0.0639 (12) | 0.0834 (15) | 0.221 (4) | −0.0002 (10) | 0.0623 (19) | −0.031 (2) |
| C10 | 0.0793 (17) | 0.0574 (15) | 0.091 (2) | 0.0121 (13) | 0.0235 (18) | −0.0004 (17) |
| C11 | 0.098 (2) | 0.082 (2) | 0.084 (2) | −0.0235 (17) | 0.011 (2) | −0.016 (2) |
| C8 | 0.0464 (13) | 0.0554 (15) | 0.164 (4) | 0.0008 (12) | 0.024 (2) | −0.018 (2) |

*Geometric parameters (Å, º)*

| | | | |
|---|---|---|---|
| O1—C2 | 1.357 (3) | C5—C6 | 1.372 (3) |
| O1—C9 | 1.444 (3) | C6—H6 | 0.9300 |
| C4—C3 | 1.370 (4) | C9—C10 | 1.505 (4) |
| C4—C5 | 1.384 (4) | C9—C11 | 1.505 (4) |
| C4—H4 | 0.9300 | C9—H9 | 0.9800 |
| C2—C3 | 1.391 (3) | O2—C8 | 1.196 (5) |
| C2—C1 | 1.396 (3) | C10—H10A | 0.9600 |
| C7—C5$^{i}$ | 1.514 (4) | C10—H10B | 0.9600 |
| C7—C5 | 1.515 (4) | C10—H10C | 0.9600 |
| C7—H7A | 0.9700 | C11—H11A | 0.9600 |
| C7—H7B | 0.9700 | C11—H11B | 0.9600 |
| C1—C6 | 1.389 (3) | C11—H11C | 0.9600 |
| C1—C8 | 1.469 (3) | C8—H8 | 0.9300 |
| C3—H3 | 0.9300 | | |
| | | | |
| C2—O1—C9 | 120.03 (18) | C5—C6—H6 | 118.9 |
| C3—C4—C5 | 122.9 (2) | C1—C6—H6 | 118.9 |
| C3—C4—H4 | 118.5 | O1—C9—C10 | 110.4 (3) |
| C5—C4—H4 | 118.5 | O1—C9—C11 | 105.1 (2) |
| O1—C2—C3 | 124.9 (2) | C10—C9—C11 | 112.3 (2) |
| O1—C2—C1 | 116.35 (18) | O1—C9—H9 | 109.6 |
| C3—C2—C1 | 118.8 (2) | C10—C9—H9 | 109.6 |
| C5$^{i}$—C7—C5 | 113.9 (4) | C11—C9—H9 | 109.6 |
| C5$^{i}$—C7—H7A | 108.8 | C9—C10—H10A | 109.5 |
| C5—C7—H7A | 108.8 | C9—C10—H10B | 109.5 |
| C5$^{i}$—C7—H7B | 108.8 | H10A—C10—H10B | 109.5 |
| C5—C7—H7B | 108.8 | C9—C10—H10C | 109.5 |
| H7A—C7—H7B | 107.7 | H10A—C10—H10C | 109.5 |
| C6—C1—C2 | 119.6 (2) | H10B—C10—H10C | 109.5 |
| C6—C1—C8 | 119.7 (3) | C9—C11—H11A | 109.5 |
| C2—C1—C8 | 120.8 (2) | C9—C11—H11B | 109.5 |
| C4—C3—C2 | 119.6 (2) | H11A—C11—H11B | 109.5 |
| C4—C3—H3 | 120.2 | C9—C11—H11C | 109.5 |

| | | | |
|---|---|---|---|
| C2—C3—H3 | 120.2 | H11A—C11—H11C | 109.5 |
| C6—C5—C4 | 116.9 (2) | H11B—C11—H11C | 109.5 |
| C6—C5—C7 | 121.8 (2) | O2—C8—C1 | 124.6 (3) |
| C4—C5—C7 | 121.2 (2) | O2—C8—H8 | 117.7 |
| C5—C6—C1 | 122.2 (2) | C1—C8—H8 | 117.7 |

| | | | |
|---|---|---|---|
| C9—O1—C2—C3 | 9.8 (4) | C5$^{i}$—C7—C5—C6 | −122.2 (3) |
| C9—O1—C2—C1 | −169.6 (2) | C5$^{i}$—C7—C5—C4 | 58.8 (2) |
| O1—C2—C1—C6 | 178.9 (2) | C4—C5—C6—C1 | 0.4 (4) |
| C3—C2—C1—C6 | −0.5 (4) | C7—C5—C6—C1 | −178.6 (3) |
| O1—C2—C1—C8 | −0.9 (4) | C2—C1—C6—C5 | 0.0 (4) |
| C3—C2—C1—C8 | 179.7 (3) | C8—C1—C6—C5 | 179.8 (3) |
| C5—C4—C3—C2 | −0.1 (4) | C2—O1—C9—C10 | 68.9 (3) |
| O1—C2—C3—C4 | −178.8 (2) | C2—O1—C9—C11 | −169.7 (2) |
| C1—C2—C3—C4 | 0.6 (4) | C6—C1—C8—O2 | −4.1 (6) |
| C3—C4—C5—C6 | −0.4 (4) | C2—C1—C8—O2 | 175.7 (4) |
| C3—C4—C5—C7 | 178.7 (3) | | |

Symmetry code: (i) −*x*+1/2, −*y*+1/2, *z*.

*Hydrogen-bond geometry (Å, º)*

| *D*—H···*A* | *D*—H | H···*A* | *D*···*A* | *D*—H···*A* |
|---|---|---|---|---|
| C8—H8···O1 | 0.93 | 2.42 | 2.749 (3) | 101 |